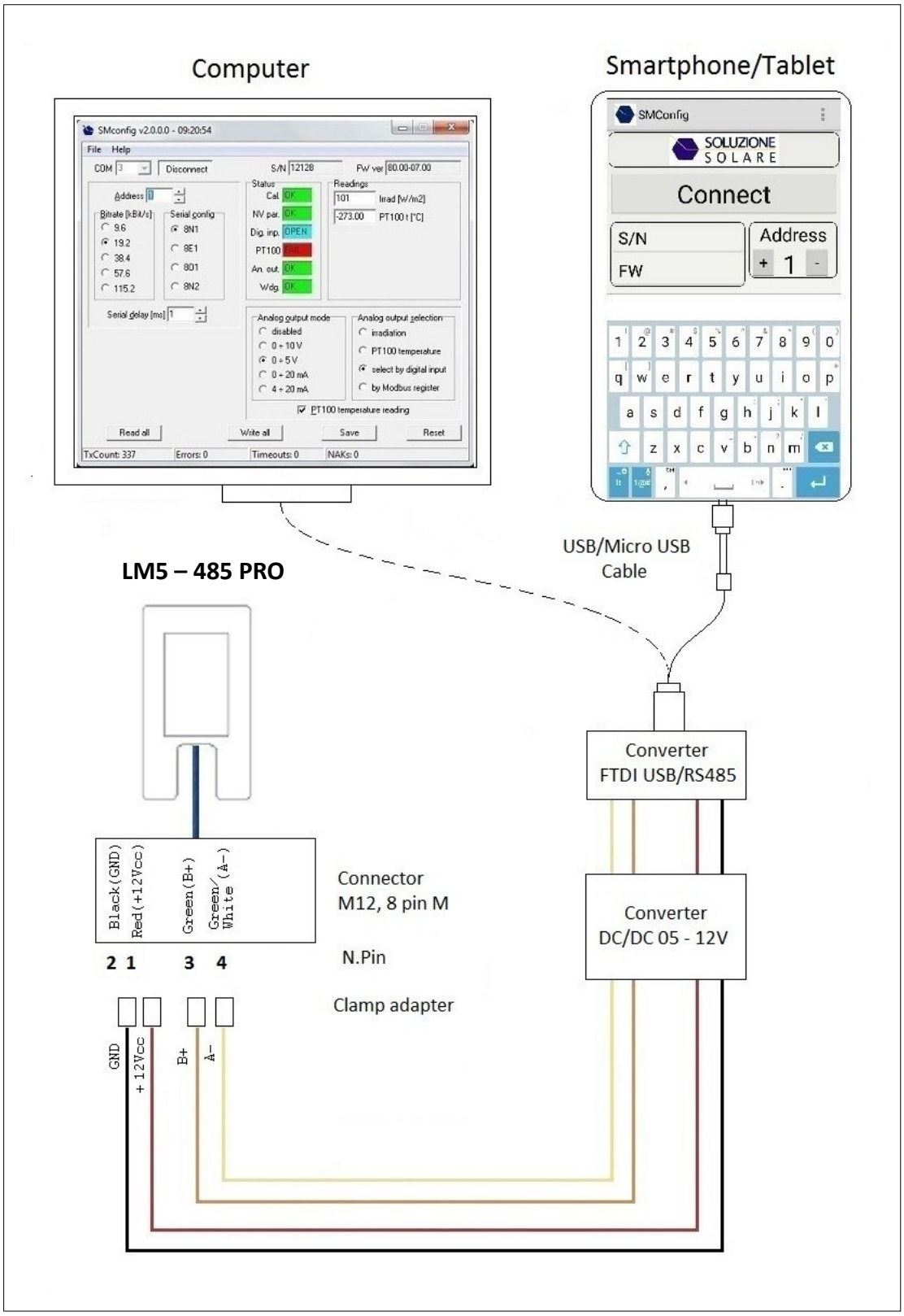
Computer
Smartphone/Tablet
SMConfig
SOLUZIONE SOLARE
Connect
S/N
FW
Address
1
USB/Micro USB Cable
LM5 – 485 PRO
Converter FTDI USB/RS485
Converter DC/DC 05 - 12V
Black(GND)
Red(+12Vcc)
Green(B+)
Green/White(A-)
Connector M12, 8 pin M
N.Pin
2 1 3 4
Clamp adapter
GND
+12Vcc
B+
A-